PVP 20

Code: 20ES1104

I B.Tech - I Semester – Regular / Supplementary Examinations
FEBRUARY - 2023

ENGINEERING GRAPHICS
(Common for EEE, ECE)

Duration: 3 hours Max. Marks: 70

Note: 1. This paper contains questions from 5 units of Syllabus. Each unit carries 14 marks and have an internal choice of Questions.
2. All parts of Question must be answered in one place.

BL – Blooms Level CO – Course Outcome

			BL	CO	Max. Marks
		UNIT-I			
1		Draw a straight line AB of any length. Mark a point F,65 mm from AB. Trace the paths of points P moving in such a way that the ratio of its distance from the point F to its distance from AB is 2:3. Name the curve. Draw a normal and tangent to curve at a point 50 mm from F.	L3	CO1	14 M
		OR			
2		Draw an involute of a circle of 40mm diameter. Also, draw a normal and a tangent to it at a point 100 mm from the centre of the circle.	L3	CO1	14 M

UNIT-II				
3	A line PQ 100mm long, is inclined at 30^0 to the H.P. and at 45^0 to the V.P and 20mm above the H.P. Draw its projections if its end P is in the third quadrant and Q in the first quadrant.	L3	CO2	14 M
OR				
4	Draw the projections of a regular hexagon of 25mm side having one of its sides in the H.P. and inclined at 60^0 to the V.P and its surface making an angle of 45^0 with the H.P.	L3	CO2	14 M
UNIT-III				
5	Draw the projections of cube of 25mm long edges resting on the H.P. on one of its corners with a solid diagonal perpendicular to the V.P.	L3	CO3	14 M
OR				
6	A square pyramid base 40mm side and axis 65mm long has its base on the H.P and all the edges of the base equally inclined to the V.P. It is cut by section plane perpendicular to the V.P inclined at 45^0 to the H.P and bisecting the axis. Draw its sectional top view and true shape of the section.	L3	CO3	14 M

	UNIT-IV			
7	Draw the front view, top view and side view of the part shown in figure. 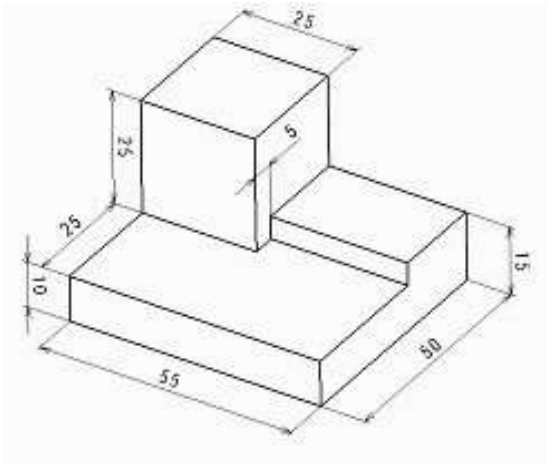 	L3	CO4	14 M
	OR			
8	Develop the isometric view of the object from the given orthographic views. 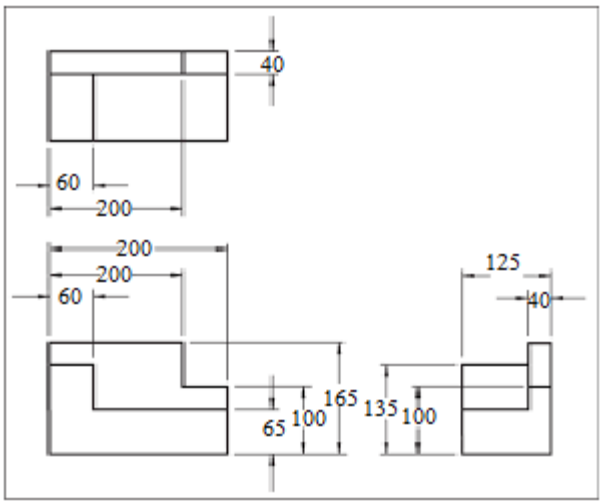 	L3	CO4	14 M
	UNIT-V			
9	A hexagonal prism, edge of base 20 mm and axis 50 mm long, rests with its base on HP such that one of its rectangular faces is parallel to VP.	L3	CO5	14 M

	It is cut by a plane perpendicular to VP, inclined at 45° to HP and passing through the right corner of the top face of the prism. Develop the lateral surfaces of the truncated prism.			
	OR			
10	List and explain the commands involved in preparing the drawing shown below. 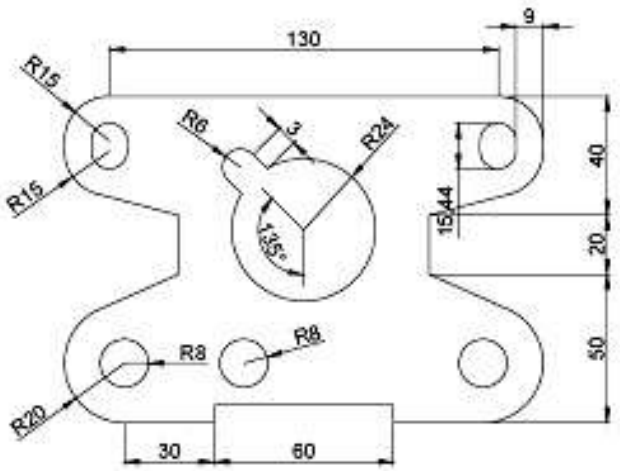	L3	CO5	14 M